U.S. Technical Highlights

2025.5 Volvo XC90 T8

Electric range* (in pure mode)	32 mi
Combined range*	530 mi
Fuel economy* (combined)	58 MPGe
Battery capacity	18.8 kWh
Battery capacity (usable)	14.7 kWh
Power, total	455 hp
Power, electric	143 hp
Power, engine	312 hp
Torque	523 lb-ft
Drive type	AWD
0-60 mph	5.0 sec
Largest luggage volume	72 ft^3
Curb weight	5,064 lbs

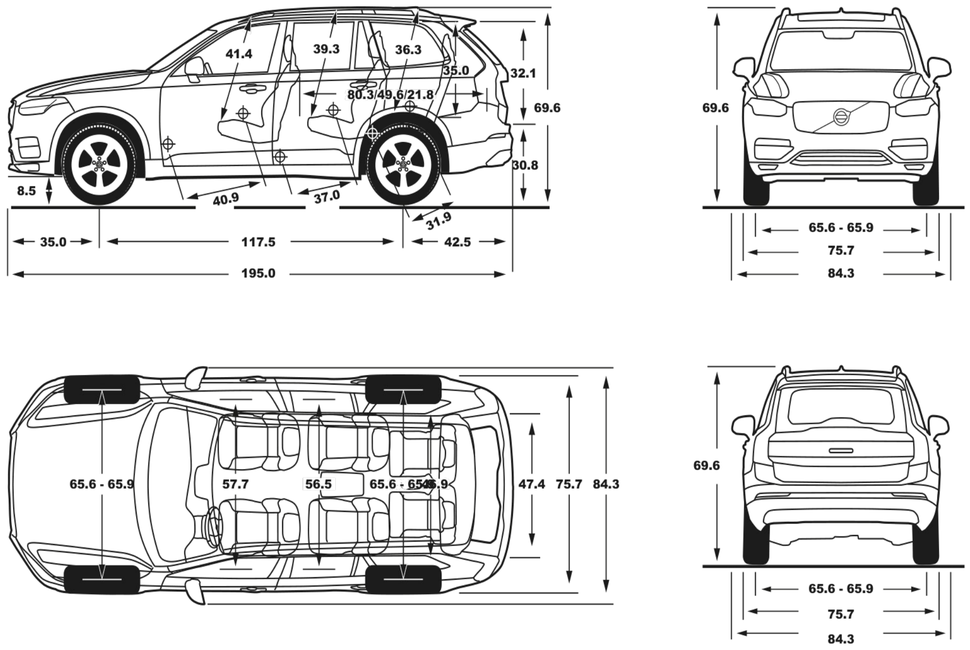

*Range is according to EPA driving cycles and real-world range may vary.
* Estimated range according to the EPA driving cycles. The actual range achieved under real conditions varies depending on driving behavior, driving conditions, how you maintain your vehicle, battery and other external factors. Visit fueleconomy.gov for further information.